ЗАКАЗ ТЕХНИКИ И ЗАПЧАСТЕЙ www.komimport.ru т.(495) 651-61-19 e-mail: komatsu@komimport.ru

MAXIMUM GVW
385852 kg **850,650 lb**
GROSS HORSEPOWER
1865 kW **2,500 HP**

KOMATSU®

830E

Photo may include optional equipment.

Electric Drive Truck

ЗАКАЗ ТЕХНИКИ И ЗАПЧАСТЕЙ www.komimport.ru т.(495) 651-61-19 e-mail: komatsu@komimport.ru

ЗАКАЗ ТЕХНИКИ И ЗАПЧАСТЕЙ www.komimport.ru т.(495) 651-61-19 e-mail: komatsu@komimport.ru

SPECIFICATIONS

ENGINE

*Make and model . . . . . Komatsu SDA16V160
Fuel . . . . . Diesel
Number of cylinders 16
Operating cycle . . . . . 4 cycle
Rated brake power . . . . . 1865 kW **2,500 HP @ 1900 rpm
***Flywheel power . . . . . 1761 kW **2,360 HP** @ 1900 rpm
Weight (wet) . . . . . 9608 kg **21,182 lb**

* Tier 2 emissions certified. Tier 1 emissions engine is optional outside of North America.
** Rated brake power is the output of the engine as installed in this machine, at governed rpm and with engine manufacturer's approved fuel setting. Accessory losses included are water pump, fuel pump and oil pump
*** Flywheel power is the rated power at the engine flywheel minus the average accessory losses. Accessories include fan and charging alternator. Rating(s) represent gross engine performance in accordance with SAE J1349 conditions.

ELECTRIC DRIVE

AC/DC CURRENT
Alternator . . . . . G.E. GTA-26
Dual impeller in-line blower . . . . . 255 m³/min **9,000 cfm**
Control . . . . . Statex III Fuelsaver
*Motorized wheels . . . . . G.E. 787
*Ratio 31.875:1
Speed (maximum) . . . . . 48.8 kph **30.3 mph**

* Wheel motor application depends upon gross vehicle weight, haul road grade, haul road length, rolling resistance and other parameters. Komatsu and G.E. must analyze each job condition to assure proper application.
**Optional ratios available.

TIRES AND RIMS

Rock service, tubeless, tires (bias ply or radial)
*Standard tire 40.00 R57
Standard five (5) piece rim
737 mm x 1488 mm x 152 mm **29" x 57" x 6"** patented Phase II New Generation rim assembly with patented 152 mm **6"** double forged flanges. Not interchangeable with other manufacturers' rims due to improved design for greater load support and longer fatigue life. Rated at 827 kPa **120 psi** cold inflation pressure.
Typical tire weight . . . . . .21081 kg **46,476 lb**

* Tires should meet application requirements for **tmph**/tkph, tread, compound, inflation pressure, ply rating or equivalent, etc.

BODY

All-welded steel flat floor body with horizontal bolsters and full canopy. Rear wheel rock ejectors, body up cable, and rubber mounts on frame are standard. Pivot exhaust heating optional.
Floor sheet . . . . . 19 mm **0.75"** 1379 mPa **200,000 psi** tensile strength steel (two-piece)
Front sheet . . . . . 12 mm **0.47"** 1379 mPa **200,000 psi** tensile strength steel
Side sheet . . . . . 8 mm **0.31"** 1379 mPa **200,000 psi** tensile strength steel
Canopy sheet . . . . . 5 mm **0.19"** 690 mPa **100,000 psi**
Struck . . . . . 117 m³ **153 yd³**
Standard SAE heaped 2:1 . . . . . 147 m³ **193 yd³**
Standard Komatsu body weight . . . . . .27669 kg **61,000 lb**

CAB

Advanced Operator Environment with integral 4-post ROPS/FOPS structure (meets J1040 Apr88), adjustable air suspension seat w/lumbar support and arm rests, passenger seat, maximum R-value insulation, tilt and telescoping steering wheel, electric windshield wipers w/washer, tinted glass, power windows, Komatsu Payload Weighing System, 55,000 Btu/hr heater and defroster, 21,600 Btu/hr air conditioning (HFC - 134A refrigerant).

FRAME

Advanced technology, full butt-welded box-sectional ladder-type frame with integral ROPS supports, integral front bumper, rear tubular cross members, steel castings at all critical stress transition zones, rugged continuous horsecollar.
Plate material . . . . . 482.6 mPa **70,000 psi** tensile strength steel
Casting material . . . . . 620.5 mPa **90,000 psi** tensile strength steel
Rail width . . . . . 305 mm **12"**
Rail depth (minimum) . . . . . 864 mm **34"**
Top and bottom plate thickness . . . . . 32 mm **1.25"**
Side plate thickness . . . . . 16 mm **0.62"**
Drive axle mounting . . . . . Pin and spherical bushing
Drive axle alignment . . . . . Swing link between frame and axle

BRAKING SYSTEM

Service brakes: all-hydraulic actuated
Front . . . . . .Wheel speed disc. Three calipers on a 1213 mm **47.75"** O.D. disc.
Rear . . . . . .Dual disc armature speed. Two 635 mm **25"** O.D. discs per side. One caliper per disc.
Emergency brakes . . . . . .Automatically applied prior to hydraulic system pressure dropping below level required to meet secondary stopping requirements.
Wheel brake locks . . . . . .Switch-activated
Parking brakes . . . . . .Spring-applied, hydraulically released, with speed application protection.
Electric dynamic retarder (max.) . . . . . .2983 kW **4000 hp**
Continuously rated blown grids. Two-speed overspeed retarding. Extended range retarding. Reverse retarding.

SUSPENSION

HYDRAIR® II
Variable rate hydro-pneumatic with integral rebound control.
Max. front stroke . . . . . 335 mm **13.2"**
Max. rear stroke . . . . . 279 mm **11.0"**
Max. rear axle oscillation . . . . . ±10.3º

COOLING SYSTEM

L&M radiator assembly with sight gauge. Deaeration-type top tank. Dual pass cooling.
Radiator frontal area . . . . . 6.24 m² **67.2 ft²**

SERVICE CAPACITIES

Cooling system	.568 L	**150 U.S. gal**
*Crankcase	.280 L	**74 U.S. gal**
Hydraulic system	.946 L	**250 U.S. gal**
Motor gear box	.40 L	**10.5 U.S. gal**
Fuel	.4542 L	**1200 U.S. gal**

* Includes lube oil filters

ЗАКАЗ ТЕХНИКИ И ЗАПЧАСТЕЙ www.komimport.ru т.(495) 651-61-19 e-mail: komatsu@komimport.ru

ЗАКАЗ ТЕХНИКИ И ЗАПЧАСТЕЙ www.komimport.ru т.(495) 651-61-19 e-mail: komatsu@komimport.ru

DIMENSIONS

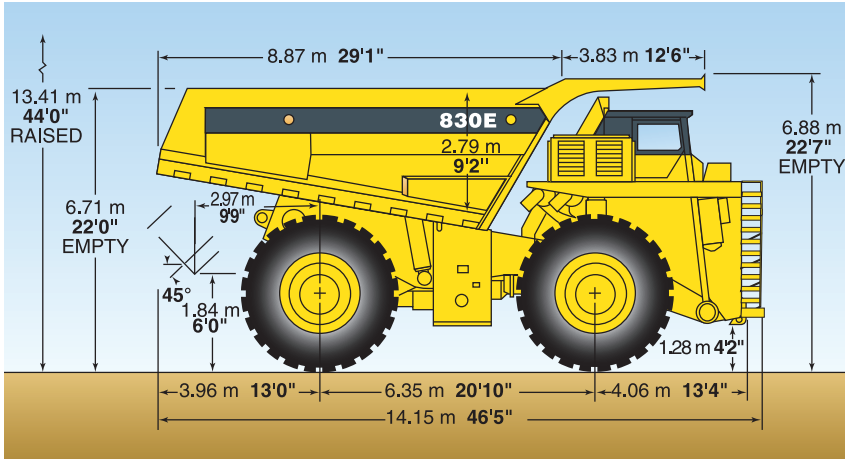

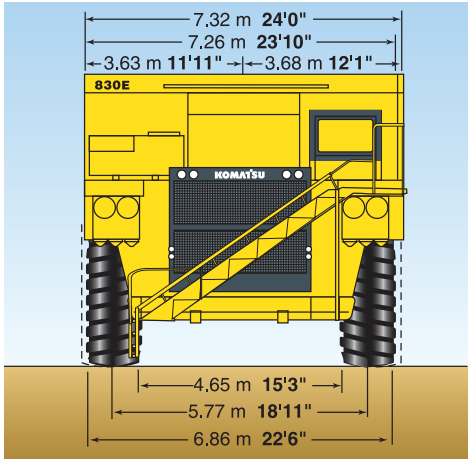

All dimensions are with 147 m³ **193 yd³** body.

Bodies	Struck	2:1 Heap	Loading Height*
Standard	117 m³ **153 yd³**	147 m³ **193 yd³**	6.71 m **22'**

* Exact load may vary due to tire make, type and inflation pressure.

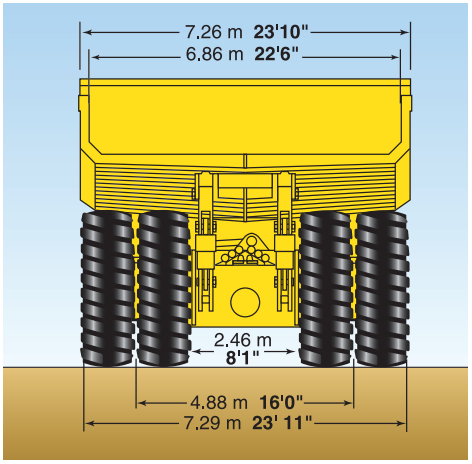

HYDRAULIC SYSTEM

Steering . . . . . Accumulator-assisted twin cylinders provide constant rate steering. Emergency steering automatically supplied by accumulator.
Turning circle diameter (SAE) . . . . . 28.4 m **93 ft**
Reservoir . . . . . 901 L **238 U.S. gal**
Filtration . . . . . In-line replaceable elements
Suction . . . . . Single, full-flow, 100 mesh
Hoist and steering . . . . . Dual, in-line, high-pressure.
Brake component cabinet . . . . . Above-deck, easily accessible with diagnostic test connections.
Hoist . . . . . Two 3-stage dual-acting outboard cylinders, internal cushion valve, over-center damping.
Hoist times
Power-up loaded . . . . . 25 sec
Power-down . . . . . 27 sec
Float-down empty . . . . . 24 sec
Pumps
Hoist . . . . . Tandem gear-type pump with output of 851 lpm **225 gpm** @ 1900 rpm and 17240 kPa **2,500 psi**

Steering and brake . . . . . Pressure compensating piston pump with output of 246 lpm **65 gpm** @ 1900 rpm and 18961 kPa **2,750 psi**

System relief pressures
Hoist . . . . . 17240 kPa **2,500 psi**
Steering and Brake . . . . . 27580 kPa **4,000 psi**
Quick disconnects standard for powering disabled truck and for system diagnostics.

ELECTRICAL SYSTEM

4 x 8D 1450 CCA, 12 volt batteries, in series/parallel,deck-mounted with disconnect switch.
Alternator . . . . . 24 volt, 260 amp
Lighting . . . . . 24 volt
Cranking motors . . . . . two/24 volt

WEIGHT DISTRIBUTION

Empty vehicle weight (wet, 100% fuel, no options, std Komatsu body, std tires)

Front axle	81823 kg	**180,387 lb**	50%
Rear axle	80682 kg	**177,872 lb**	50%
Total EVW	162505 kg	**358,259 lb**	

Gross vehicle weight (Nominal)

Front axle	127330 kg	**280,715 lb**	33%
Rear axle	258521 kg	**569,936 lb**	67%
Total	385852 kg	**850,650 lb**	
Nominal payload*	223347 kg	**492,391 lb**	
		246 U.S. ton	

*Nominal payload is defined by Komatsu America Corp. payload policy documentation. In general, the nominal payload must be adjusted for the specific vehicle configuration and site application. The figures above are provided for basic product description purposes. Please contact your Komatsu distributor for specific application requirements.

ЗАКАЗ ТЕХНИКИ И ЗАПЧАСТЕЙ www.komimport.ru т.(495) 651-61-19 e-mail: komatsu@komimport.ru

ЗАКАЗ ТЕХНИКИ И ЗАПЧАСТЕЙ www.komimport.ru т.(495) 651-61-19 e-mail: komatsu@komimport.ru

STANDARD EQUIPMENT

- Air cleaners, Donaldson SRG
- Alternator (24 volt/260A)
- Auto lubrication system –90 lbs.
- Batteries (4 x 8D, 1450 CCA 12 volt)
- Battery charging receptacle, 24 volt
- Body down indicator/body up buzzer
- Body over center device
- Brakes: Front: Wheel speed disc; Rear: dual disc armature speed
- Electric start
- Filters, high pressure hydraulic
- Gate valves on hydraulic tank
- Komatsu control cabinet
- Komatsu Payload Weighing System-PLM III
- Mirrors, LH flat and RH rectangular convex
- Mud flaps
- Muffled exhaust, deck-mounted
- On-board load box
- Power supply, 24 volt and 12 volt DC
- Quick disconnects (steering and hoist)
- Radiator sight gauge
- Removable power module unit (radiator, engine, alternator, blower)
- Retard grids, 14-element, blown, 7 step (EER) Extended Range Retarding
- Retard speed control
- Reverse retarding
- Rock ejectors
- Thermostatic Fan Clutch
- Two-speed overspeed retarding
- Vari-volt alternator control
- Fast-Fill Fuel System (in-tank)
- Service Center LH (radiator, engine, hydraulics)

OPERATION ENVIRONMENT & CONTROL

- All-hydraulic service brakes with emergency auto apply
- Battery disconnect switch
- Body up cable
- Brake lock and drive system interlock
- Circuit breakers, 24 volt
- Diagonal staircase across grill, R to L
- Dynamic retarding with continuous rated grids
- Engine shutdown at ground level
- Hoist propulsion interlock
- Horns (electric)
- Integral roll-over protection (ROPS)
- Maintenance & power lock-out
- Parking brake with warning light and speed application protection
- Power steering w/auto emergency steering
- Protective deck rails
- Pump drive line protector
- Radiator fan guard
- Seat belts 76 mm **3"** retractable
- Skid-resistant coating on walkways

STANDARD HIGH VISIBILITY DELUXE CAB:

Instrumentation

- Alarm System warning lights (red)
  - Accumulator pre-charge
  - Coolant low level w/alarm
  - Coolant high temperature w/alarm
  - Electric drive system cooling blower w/alarm
  - Electric system fault w/alarm
  - Hydraulic oil level w/alarm
  - Hydraulic oil temperature w/alarm
  - Low engine oil pressure w/alarm
  - Low brake pressure w/alarm
  - Motorized wheel temperature w/alarm
  - Stop engine w/alarm
  - Steering pressure w/alarm
- Air cleaner vacuum indicators
- Air conditioner HFC 134a
- AM/FM cassette radio, XM capable
- Blower pressure indicator light
- Digital tachometer and speedometer
- Dome light
- Engine hourmeter
- Engine shutdown
- Floor mat
- Fuel gauge in cab and on tank
- Gauges (w/back light)
- Headlight switch
- Heater and defroster (heavy-duty)
- Heater switch
- High beam selector and indicator
- Indicator lights (amber):
  - 5-minute idler timer
  - Auto lube alarm
  - Check engine w/alarm
  - Circuit breaker tripped
  - Dynamic retarding
  - Dump body up
  - Hydraulic oil filter
  - Low fuel level
  - Manual back-up lights
  - Park brakes applied
  - Retard speed control
  - Service brakes
  - Starter circuit
- Insulation (Max R-Value)
- Oil pressure gauge
- Operator seat, adjustable w/air suspension, lumbar support and arm rests
- Panel lighting (adjustable)
- Passenger seat
- Payload Meter PLM III
- Power windows
- Pressurized cab air system
- RS232 port–Statex III-PLM III
- Starter key switch
- Steering system warning light and buzzer
- Sunvisor (adjustable)
- Tilt and telescoping steering wheel
- VHMS with ORBCOMM
- Voltmeter (battery output)
- Windshield (tinted safety plate)
- Windshield wipers and washer (electric)

LIGHTING:

- Back-up lights (2)
- Brake and retard lights on top of cab
- Clearance lights
- Control cabinet service light
- Dynamic retarding, rear (2)
- Headlights—(4) halogen
- Ladder lights
- Manual back-up light, switch and indicator
- Service light in rear axle
- Stop and tail lights (2)
- Turn signals
- Under-hood service lights

OPTIONAL EQUIPMENT

(Optional equipment may change operating weight).

- Additional high-mounted headlights
- Air cleaner dust evacuators
- Arctic protection package (suspensions, antifreeze/lube below -40º C)
- Back-up lights, deck-mounted
- Body liners*
- Eliminator, Centinel, Reserve
- Filtered air inlet system
- Fire extinguisher 9 kg **20 lb**
- Fog lights
- Hot starts (engine oil, coolant, hydraulic tank)
- Hubodometer (miles or kilometers)
- Modular Mining Systems (MMS) ready
- Motorized wheel ratios (higher - lower)
- Mufflers between frame rails
- Pivot exhaust (heated body)
- Pressure fueling remote LH
- Radiator shutters
- RH Service Center
- Special language decals

*Available factory installed or non-installed. All other options and accessories listed are available factory installed only.

AESS633-04 ©2006 Komatsu America Corp. Printed in USA K12(2.5M) C 12/06 (EV-1)

KOMATSU®

www.KomatsuAmerica.com

Komatsu America Corp. is an authorized licensee of Komatsu Ltd.
Materials and specifications are subject to change without notice
KOMATSU® is a trademark of Komatsu Ltd., Japan

ЗАКАЗ ТЕХНИКИ И ЗАПЧАСТЕЙ www.komimport.ru т.(495) 651-61-19 e-mail: komatsu@komimport.ru